ZB 66, 76

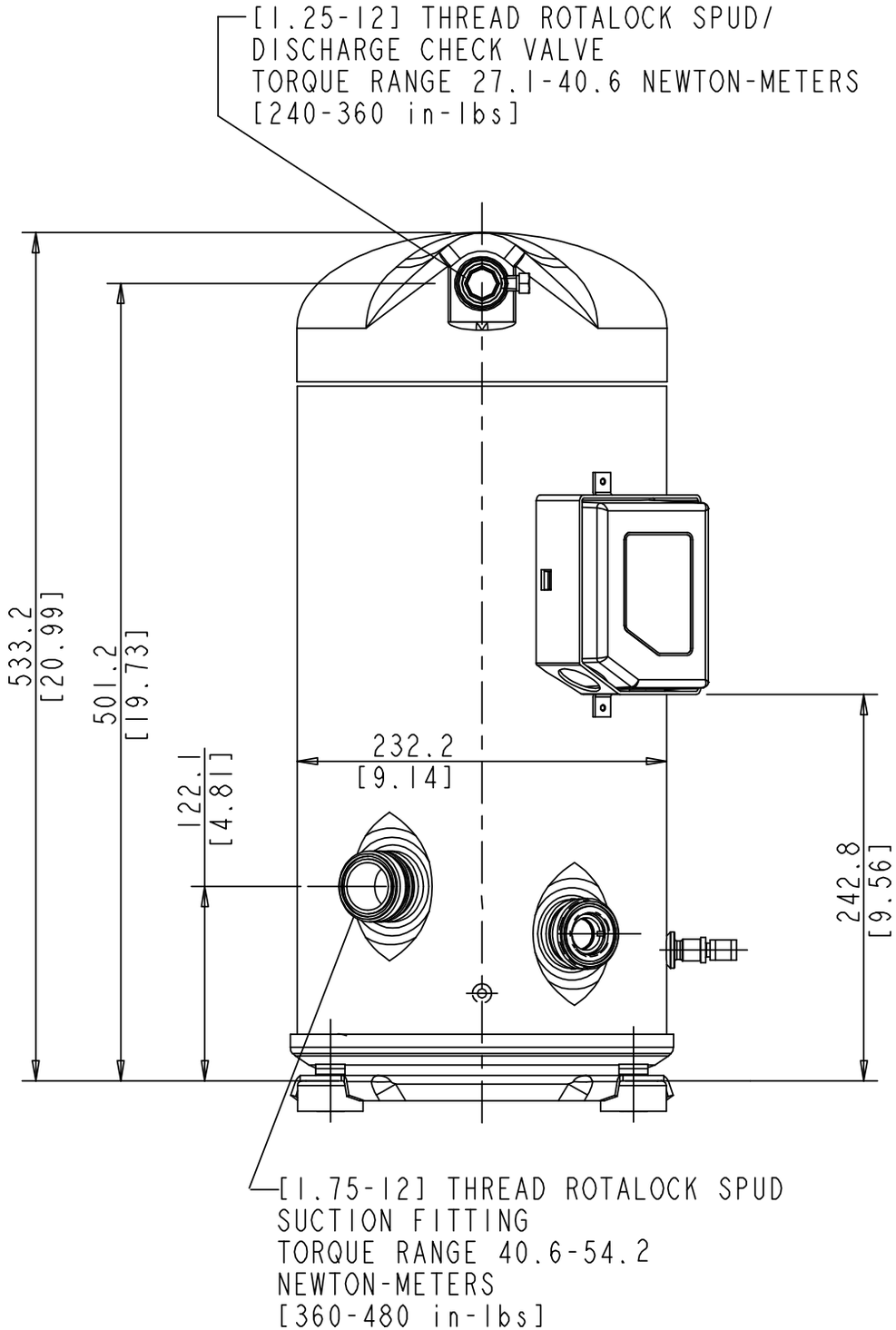
[1.25-12] THREAD ROTALOCK SPUD/
DISCHARGE CHECK VALVE
TORQUE RANGE 27.1-40.6 NEWTON-METERS
[240-360 in-lbs]
533.2
[20.99]
501.2
[19.73]
122.1
[4.81]
232.2
[9.14]
242.8
[9.56]
[1.75-12] THREAD ROTALOCK SPUD
SUCTION FITTING
TORQUE RANGE 40.6-54.2
NEWTON-METERS
[360-480 in-lbs]

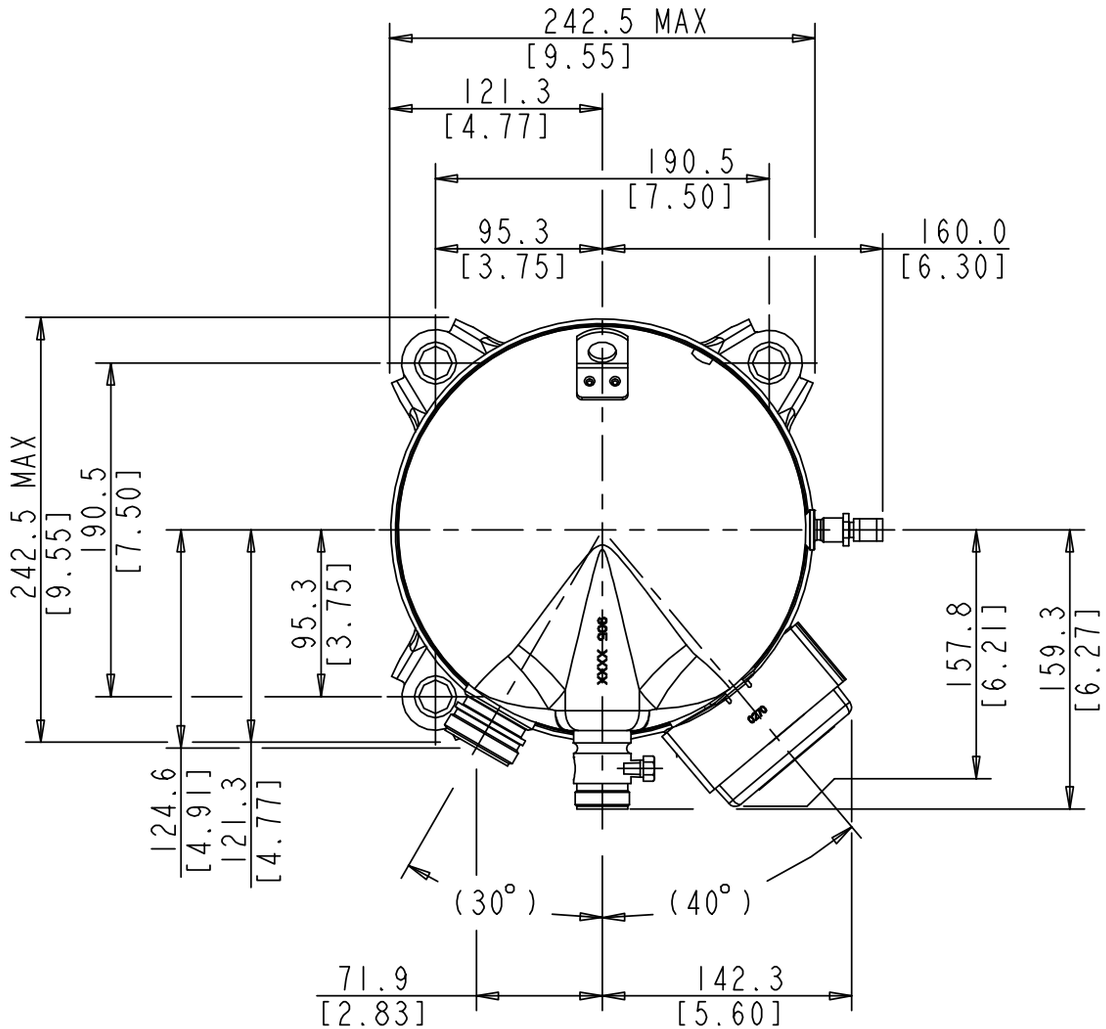
242.5 MAX
[9.55]
121.3
[4.77]
190.5
[7.50]
95.3
[3.75]
160.0
[6.30]
242.5 MAX
[9.55]
190.5
[7.50]
95.3
[3.75]
124.6
[4.91]
121.3
[4.77]
157.8
[6.21]
159.3
[6.27]
(30°)
(40°)
71.9
[2.83]
142.3
[5.60]